D815 Tessmann Worlds Edition

Driver Reno Savoya **Date** 24/05/2015 **Track** TTRC90 Belfort **Event** French nats #3

Track Condition Dry blue groove a bit slippery, high grip on concrete sections

Front

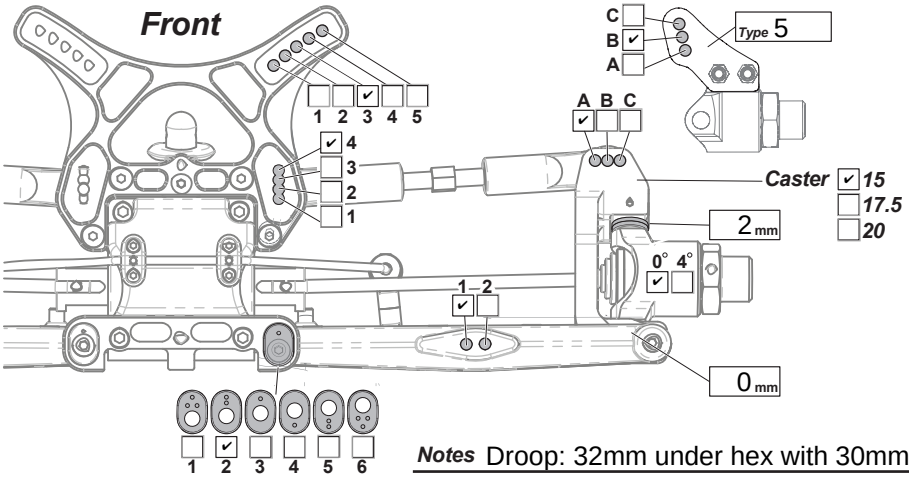

Notes Droop: 32mm under hex with 30mm block under chassis

Ride Height	25 mm
Camber Angle	-2 °
Toe Angle	2out °
Sway Bar	2,2 mm
Shock Length	mm

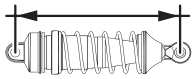

Front Shocks

Oil weight	42,5 wt
Piston	8x1,2 mm
Bladder	stock
Spring	yellow

Rear

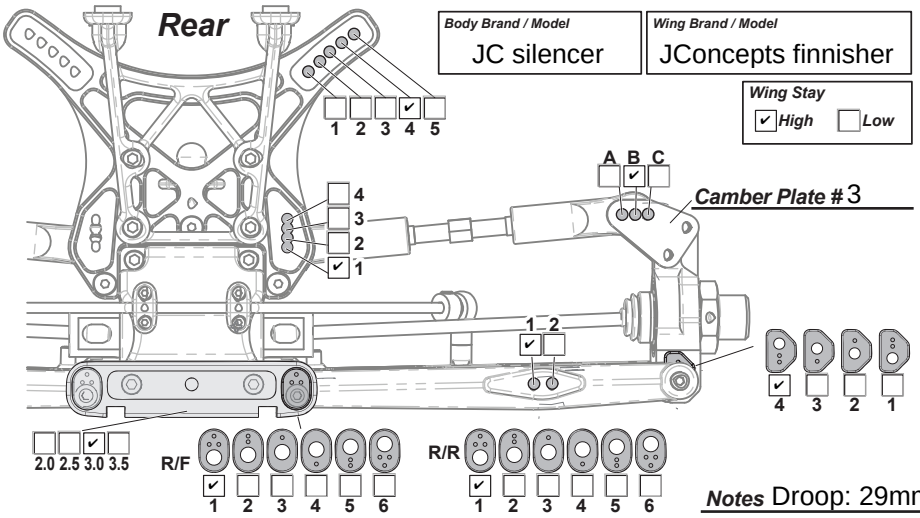

Body Brand / Model	JC silencer
Wing Brand / Model	JConcepts finnisher
Wing Stay	✔ High ☐ Low

Notes Droop: 29mm under hex with 30mm block under chassis

Ride Height	27 mm
Camber Angle	-3 °
Sway Bar	2,4 mm
Shock Length	mm

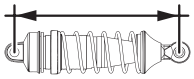

Rear Shocks

Oil weight	35 wt
Piston	8x1,2 mm
Bladder	stock
Spring	blue

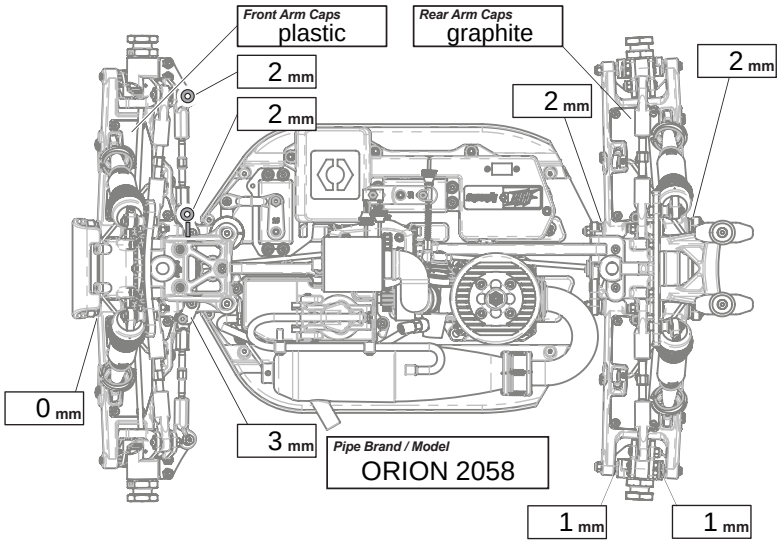

Notes Dogbones on the rear

Engine

Brand	Team Orion RS
Spur gear	46
Clutch Bell	13
Clutch Shoes	stock
Clutch Springs	stock
Glow Plug	4
Glow Fuel	Runnertime 25%

Tires

	Front	Rear
Brand	JConcepts	Reflex
Compound	green	green
Insert	dirt tech	dirt tech
Wheel	Bullet	Bullet
Notes	reflex in quals, chasers in mai	

Diff Oils

	Front	Center	Rear
Brand	ultimate	ultimate	ultimate
Oil Weight / Grade	15k	7k	5k